Please write clearly in block capitals.

Centre number | | | | | | Candidate number | | | | |

Surname _____

Forename(s) _____

Candidate signature _____
I declare this is my own work.

A-level

DESIGN AND TECHNOLOGY: PRODUCT DESIGN

Paper 1 Technical Principles

Time allowed: 2 hours 30 minutes

Materials
For this paper you must have:
- normal writing and drawing instruments
- a scientific calculator.

Instructions
- Use black ink or black ball-point pen. Use pencil only for drawing.
- Fill in the boxes at the top of this page.
- Answer **all** questions.
- You must answer the questions in the spaces provided. Do not write outside the box around each page or on blank pages.
- If you need extra space for your answer(s), use the lined pages at the end of this book. Write the question number against your answer(s).
- Do all rough work in this book. Cross through any work you do not want to be marked.

Information
- The marks for questions are shown in brackets.
- The maximum mark for this paper is 120.

For Examiner's Use	
Question	Mark
1	
2	
3–4	
5	
6	
7–8	
9–11	
12	
13–14	
15	
16–18	
19–20	
21	
22–23	
TOTAL	

Do not write outside the box

Answer **all** questions in the spaces provided.

0 1 Identify each of the following Control of Substances Hazardous to Health (COSHH) symbols.

[3 marks]

_____

_____

_____

3

Do not write outside the box

0 2 Describe the process of die cutting.

[6 marks]

6

Do not write outside the box

0 3 **Figure 1** and **Figure 2** show freestanding signage.

Figure 1

Figure 2

	Figure 1	**Figure 2**
Sign type	Safety sign	Novelty sign
Method of manufacture	Injection moulded	Vacuum formed
Material	High density polyethylene (HDPE)	High impact polystyrene (HIPS)
Style of hinge	Integrated hinge	Riveted hinge

Compare and evaluate the suitability of the manufacturing processes used for each sign.

[6 marks]

Do not write outside the box

0 4 Give **three** reasons why a product may have an anodised finish.

[3 marks]

Reason 1 _____

_____

Reason 2 _____

_____

Reason 3 _____

_____

9

Do not write outside the box

0 5 Calculate the area of the face shown in the packaging in **Figure 3**.

[6 marks]

Figure 3

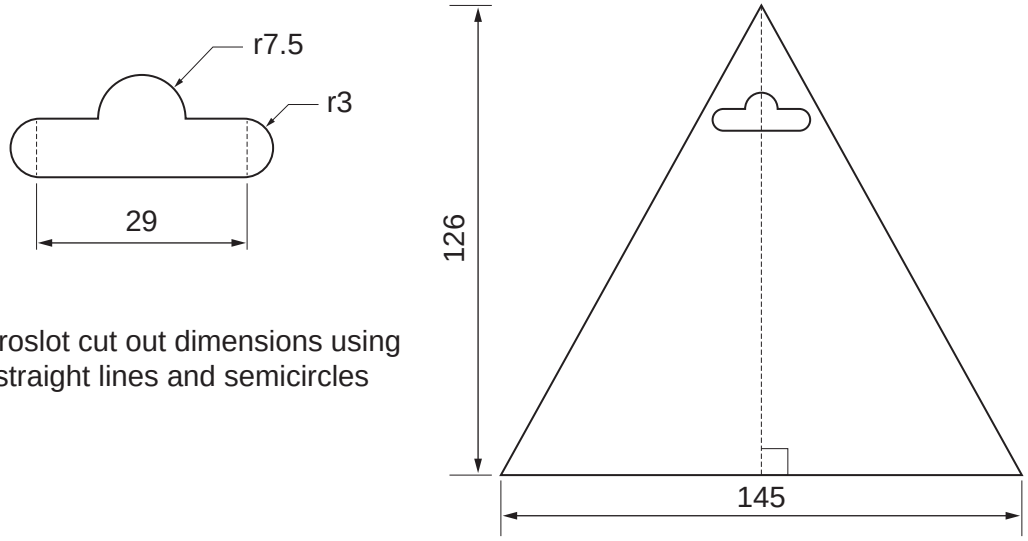

Euroslot cut out dimensions using straight lines and semicircles

Not drawn to scale
All dimensions in mm

Answer _____ mm^2

6

Do not write outside the box

0 6 Discuss the advantages and disadvantages of buying a bespoke item of furniture for the home.

[6 marks]

6

Do not write outside the box

0 7 The costs of manufacturing a component using two different methods are shown in the tables below.

Calculate the total number of products that could be produced by 3D printing before injection moulding becomes a more cost-effective method of manufacture.

[4 marks]

3D printing	
Material cost per unit	30p

Injection moulding	
Cost of mould	£8000
Material cost per unit	3p

Answer _____

Do not write outside the box

0 8 Explain why injection moulding is **not** a suitable manufacturing method for large products.

[6 marks]

10

Do not write outside the box

0 9 Name the following metal stock forms.

[2 marks]

_____

_____

Do not write outside the box

1 0 Compare and evaluate the suitability of the materials used to manufacture the dishwasher detergent packaging shown in **Figure 4** and **Figure 5**.

[6 marks]

Figure 4

Lactide

Figure 5

Individual tablet with foil-based packaging

Do not write outside the box

1 1 **Figure 6** and **Figure 7** show mug holders.

Figure 6

Figure 7

	Figure 6	**Figure 7**
Material	Beech	Low-carbon steel
Method of Manufacture	CNC turned	Cold formed
Method of Assembly	Fabricated and glued	Fabricated and welded

Analyse and evaluate the two mug holders.

In your answer you should refer to:

- the suitability of the materials used
- the manufacturing methods used.

[12 marks]

Do not write outside the box

20

Do not write outside the box

1 2 A hemispherical bowl is to be turned on a lathe from the prepared wooden cylinder in **Figure 8**. A flat base would be added after turning.

[6 marks]

Figure 8

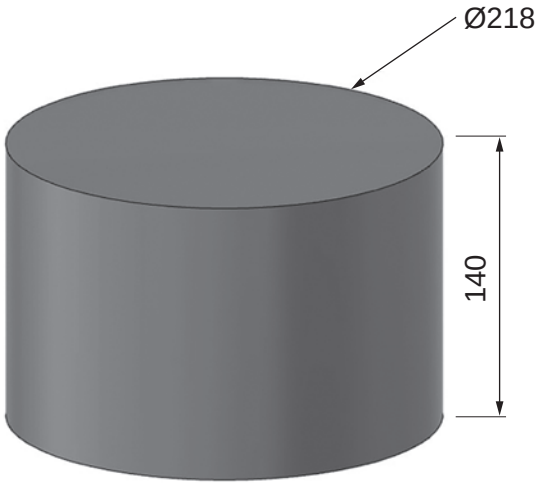

Not drawn to scale
All dimensions in mm

Calculate the percentage waste created if the turned bowl has an external diameter of 218 mm and a wall thickness of 10 mm.

Formula: volume of a sphere $V = \frac{4}{3}\pi r^3$

Percentage waste _____ %

6

Do not write outside the box

1 3 Describe how modular/cell production has improved efficiency in high-volume manufacture.

[9 marks]

Do not write outside the box

1 4 Explain how the inclusion of smart materials in electronic products aids the end-of-life disassembly.

[4 marks]

13

Do not write outside the box

Turn over for the next question

DO NOT WRITE ON THIS PAGE
ANSWER IN THE SPACES PROVIDED

Do not write outside the box

1 5 **Table 1** shows the number of aluminium offcuts stored for use in a workshop.

Table 1

Length of offcut (mm)	Frequency	Cumulative Frequency
$0 \leqslant x < 10$	4	
$10 \leqslant x < 20$	12	
$20 \leqslant x < 30$	24	
$30 \leqslant x < 40$	27	
$40 \leqslant x < 50$	26	
$50 \leqslant x < 60$	7	

Lengths that are longer than 37 mm are needed for a particular job.

Complete the cumulative frequency curve **and then** estimate the number of lengths of aluminium over 37 mm long.

[4 marks]

Do not write outside the box

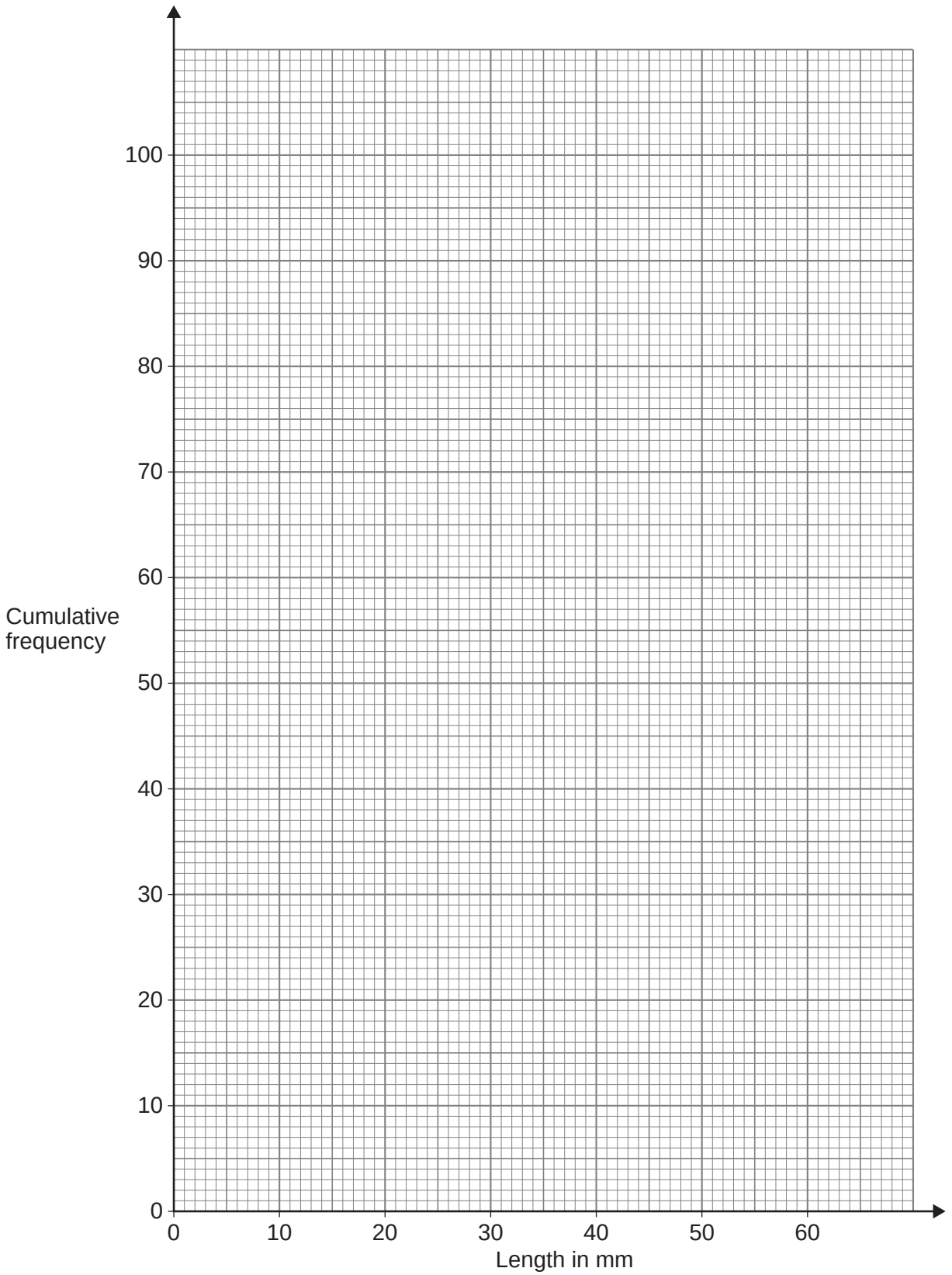

Number of lengths over 37 mm _____

4

Turn over ▶

Do not write outside the box

1 6 Explain why manufacturers of flat-pack furniture provide customers with exploded diagrams.

[6 marks]

1 7 Define the term ‘composite’.

[2 marks]

Do not write outside the box

1 8 Describe the role of a master production schedule (MPS) as part of production, planning and control networking.

[6 marks]

14

Turn over ▶

Do not write outside the box

1 9 Name a specific application for each of the following composites:

[3 marks]

Aluminium composite board _____

_____

Glass reinforced polymer (GRP) _____

_____

Glulam _____

_____

2 0 Define the following material properties:

[2 marks]

Thermal conductivity _____

_____

Toughness _____

_____

5

Do not write outside the box

2 1 Explain the manufacturing processes that would be used to manufacture the stainless steel ruler shown in **Figure 9**.

[6 marks]

Figure 9

Stainless steel ruler

6

Do not write outside the box

2 2 Explain why cedar is commonly used in outdoor cladding such as the example shown in **Figure 10**.

[6 marks]

Figure 10

Cedar clad property

Do not write outside the box

2 3 Explain why high density polyethylene (HDPE) and thermoplastic elastomer (TPE) are suitable materials for the manufacture of the polymer clothes peg shown in **Figure 11**.

[6 marks]

Figure 11

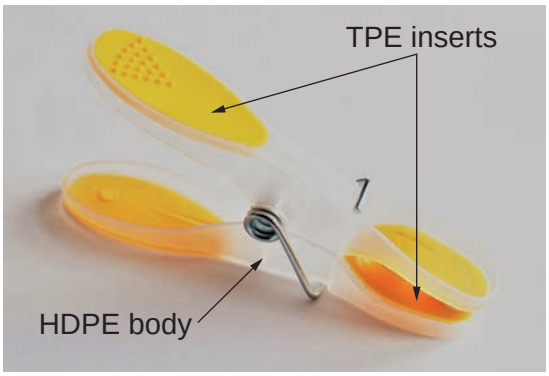

Polymer clothes peg

12

END OF QUESTIONS

Do not write outside the box

There are no questions printed on this page

DO NOT WRITE ON THIS PAGE
ANSWER IN THE SPACES PROVIDED

Do not write outside the box

Question number	Additional page, if required. Write the question numbers in the left-hand margin.

Do not write outside the box

Question number	Additional page, if required. Write the question numbers in the left-hand margin.

Do not write outside the box

Question number	Additional page, if required. Write the question numbers in the left-hand margin.

Do not write outside the box

Question number	Additional page, if required. Write the question numbers in the left-hand margin.

Do not write outside the box

Question number	Additional page, if required. Write the question numbers in the left-hand margin.

Do not write outside the box

There are no questions printed on this page

DO NOT WRITE ON THIS PAGE
ANSWER IN THE SPACES PROVIDED

Copyright information

For confidentiality purposes, all acknowledgements of third-party copyright material are published in a separate booklet. This booklet is published after each live examination series and is available for free download from www.aqa.org.uk.

Permission to reproduce all copyright material has been applied for. In some cases, efforts to contact copyright-holders may have been unsuccessful and AQA will be happy to rectify any omissions of acknowledgements. If you have any queries please contact the Copyright Team.

Copyright © 2021 AQA and its licensors. All rights reserved.